Data Sheet

Article number: 208410131
Description: E+G Lock GN 115-VDE-14-NI
St. steel

Measures

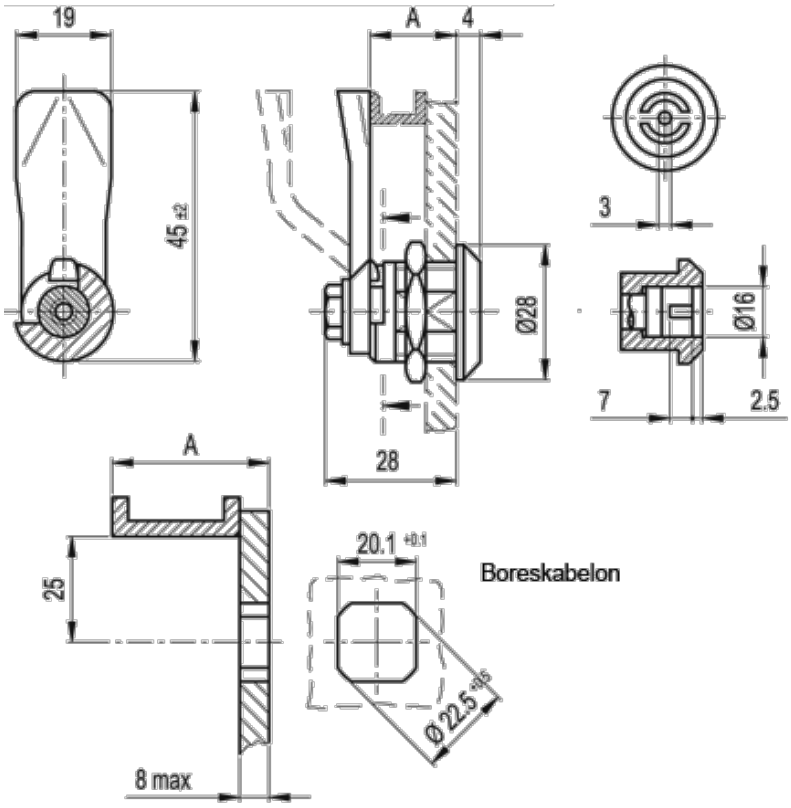

A = 14

Product drawings and brochures of any kind may contain errors for which Brd. Klee A/S cannot be liable.